90B CENTURIAN DRIVE MARKHAM, ON L3R 8C4
P. (877) 475-LIND / (905) 475-5086 F. (905) 475-4098

LIND EQUIPMENT
WORK CONFIDENTLY.

Part No	8040-T
Cable length	40ft
Cord Type	SJTW
Gauge	12
Conductors	03
End feature	Triple outlet
Outlet Rating	15A circuit breaker protected
Reel & cord Colour	Reel : Black / Cord : Yellow

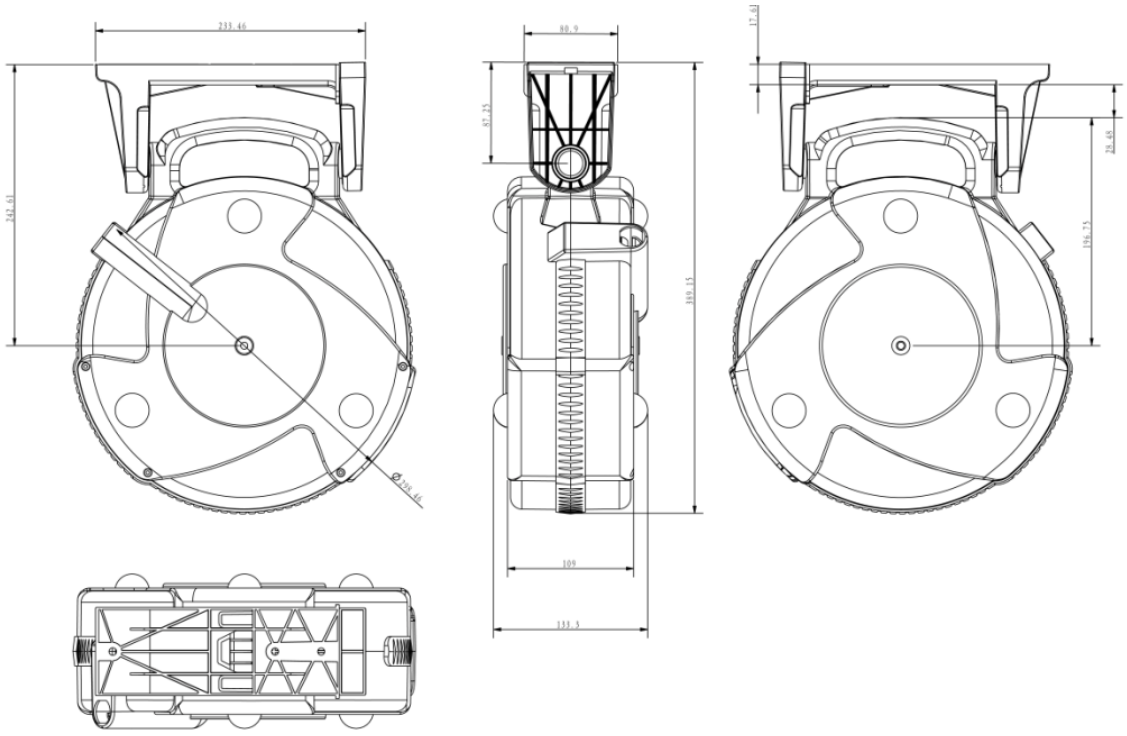

90B CENTURIAN DRIVE MARKHAM, ON L3R 8C4
P. (877) 475-LIND / (905) 475-5086 F. (905) 475-4098

LIND EQUIPMENT
WORK CONFIDENTLY.

Part No	8050-T
Cable length	50ft
Cord Type	SJTW
Gauge	14
Conductors	03
End feature	Triple outlet
Outlet Rating	13A circuit breaker protected
Reel & cord Colour	Reel : Black / Cord : Yellow

