AV65

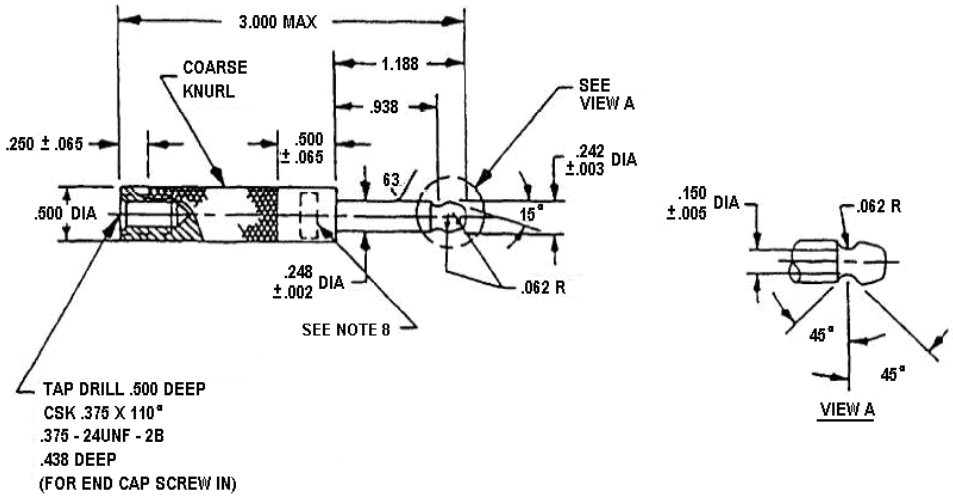
3.000 MAX
COARSE KNURL
1.188
.938
SEE VIEW A
.250 ± .065
.500 ± .065
.242 ±.003 DIA
63
.500 DIA
15°
.248 ±.002 DIA
.062 R
SEE NOTE 8
TAP DRILL .500 DEEP
CSK .375 X 110°
.375 - 24UNF - 2B
.438 DEEP
(FOR END CAP SCREW IN)
.150 ±.005 DIA
.062 R
45°
45°
VIEW A

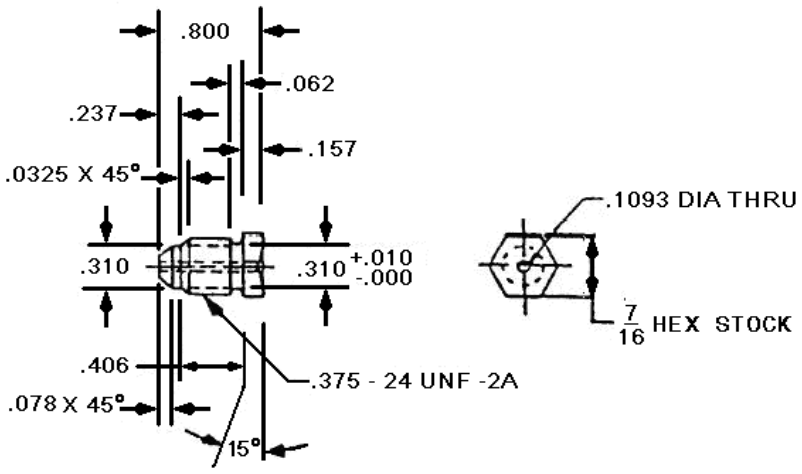
.800
.062
.237
.157
.0325 X 45°
.310
.310 +.010 -.000
.406
.078 X 45°
.375 - 24 UNF -2A
15°
.1093 DIA THRU
7/16 HEX STOCK

300 INTERNATIONAL DRIVE, SUITE 100 WILLIAMSVILLE, NY
T: 877.475.LIND (5463) F: 877.475.2030