Static Bonding Reels

FEATURES

- *For Heavy-Duty Applications*
- *Automatic Retraction*
- *Weather Resistant Finish*
- *100 Amp Alligator Clamp Termination*



DESCRIPTION

Lind Equipment Static Bonding Reels provide the automatic retraction and compact storage of 50, 75 and 100 foot cable and clamp assemblies. Designed to function under extreme environmental conditions, the 50 and 75 foot cable length models meet USAF Specification MIL-R-83232B.

By utilizing a SPIR'ATOR® Spring, rather than a power spring, for extension and retraction, Lind Equipment Static Bonding Reels are smaller and lighter than the original military specifications. This reduced size and weight make Lind Equipment reels easier to locate and mount on vehicles. A patented latching mechanism holds the cable at any desired length. A slight pull on the cable releases the mechanism causing retraction. Retraction need not be attended. The retraction speed is automatically governed by a special brake assembly designed to limit the retraction speed from two to seven feet per second. Steel components and a cantilever-type frame, which support the reel assembly, are designed to function under the most adverse conditions. Baked-on MIL spec red finish and gasketed drum construction protect operating parts from corrosion. Bearing surfaces are permanently lubricated.

SPECIFICATIONS

PART NO.	LENGTH	CABLE JACKET
ML2930-46	50'	clear PVC-coated, 1/8" OD
ML2930-46YH	50'	yellow Hytrel®-coated, 5/32" OD
ML2930-9	75'	clear PVC-coated, 1/8" OD
ML2930-9YH	75'	yellow Hytrel®-coated, 5/32" OD
ML3416-7	100'	clear PVC-coated, 1/8" OD
ML3416-7YH	100'	yellow Hytrel®-coated, 5/32" OD

CABLE TYPE:
3/32" dia., 7 x 7 galvanized steel

CLAMP:
100 amp alligator-type solid copper jaw grip (Mueller 21C, 4" length, 1-1/16" jaw opening—U.S. Govt. Type PCL-1, Federal Spec W-C-440B)*

ELECTRICAL RESISTANCE: 10 ohms maximum between clamp and mounting base on all 3 models

LIFE CYCLE: Tested to 5,000 cycles

CABLE RETRACTION SPEED:
2-7 feet/second

FINISH: Conforms to MIL-Std 808, red paint, Film Designation DG

PACKAGING: Conforms to MIL-P 726, Unit Pack-Level A, Shipping Pack-Level B

OPERATING TEMPERATURE RANGE:
-65° F TO +125° F

STORAGE TEMPERATURE RANGE:
-80° F TO +160° F

**Alternate cable lengths including wyes, cable diameters and cable hardware available on special order.*

SPECIFICATIONS SUBJECT TO CHANGE WITHOUT NOTICE

DIMENSIONS

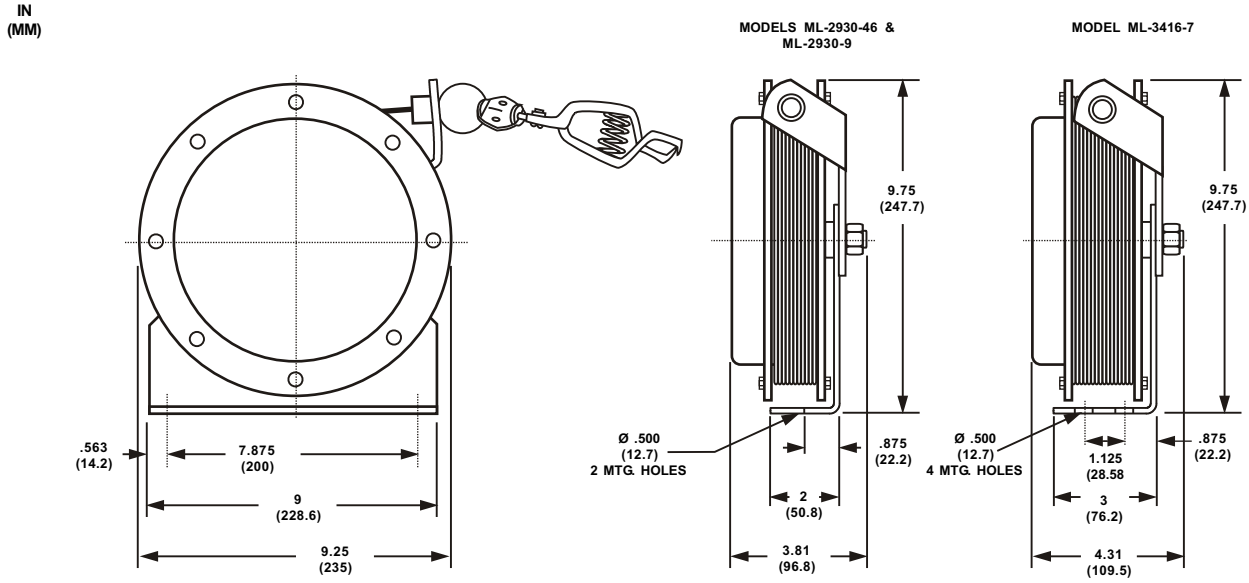

LIND EQUIPMENT
WWW.LINDEQUIPMENT.NET