LIND EQUIPMENT

WORK CONFIDENTLY.

HEAVY-DUTY CORD REELS

9000 AND 9500 SERIES

Lind Equipment's 9000 and 9500 series reels offer the best in heavy-duty reel construction without an inflated price. All-steel construction and precision crafting ensures these reels will last even in the toughest conditions. Our reels feature a variety of cord lengths and ends and come with up to 12 conductors. 9500 series reels are NEMA 4X rated for waterproof service indoors and out.

Optional cord ends include incandescent or fluorescent work lights, single or duplex outlet (15A or 20A), or GFCI protected outlets.



Cord types available from 16 gauge SJOW to 10 gauge SOW.

Ask your Lind Equipment distributor for the full part number listing and assistance in selecting the best reel that meets your unique requirements.

Dimensions - Inches (mm)

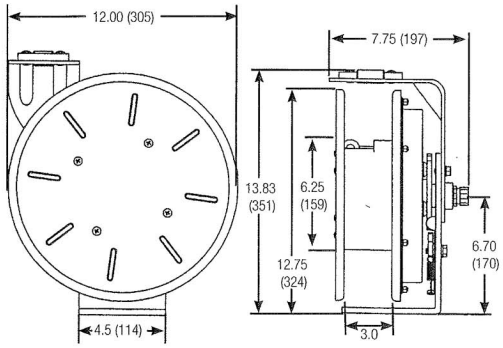

For more information about our other lines of portable electrical equipment for the toughest workplaces:

www.lindequipment.net | info@lindequipment.net | T: 877.475.LIND

LIND EQUIPMENT

WORK CONFIDENTLY.

HEAVY DUTY HIGH CAPACITY CORD REELS

LE9600 SERIES

FEATURES

- Heavy duty, all-steel, NEMA 4 construction.
- Safety-sealed, lifetime lubricated spring motor canister.
- Generously sized slip ring housing with fully articulating brushes for flawless contact, even in demanding conditions.
- 600 volt rating (1-4 conductors).
- CSA Certified
- Ideal for: Utility trucks, aviation hangars, automated material handling, large cable-end accessories, overhead hoists and cranes, truck cranes and ladder trucks.



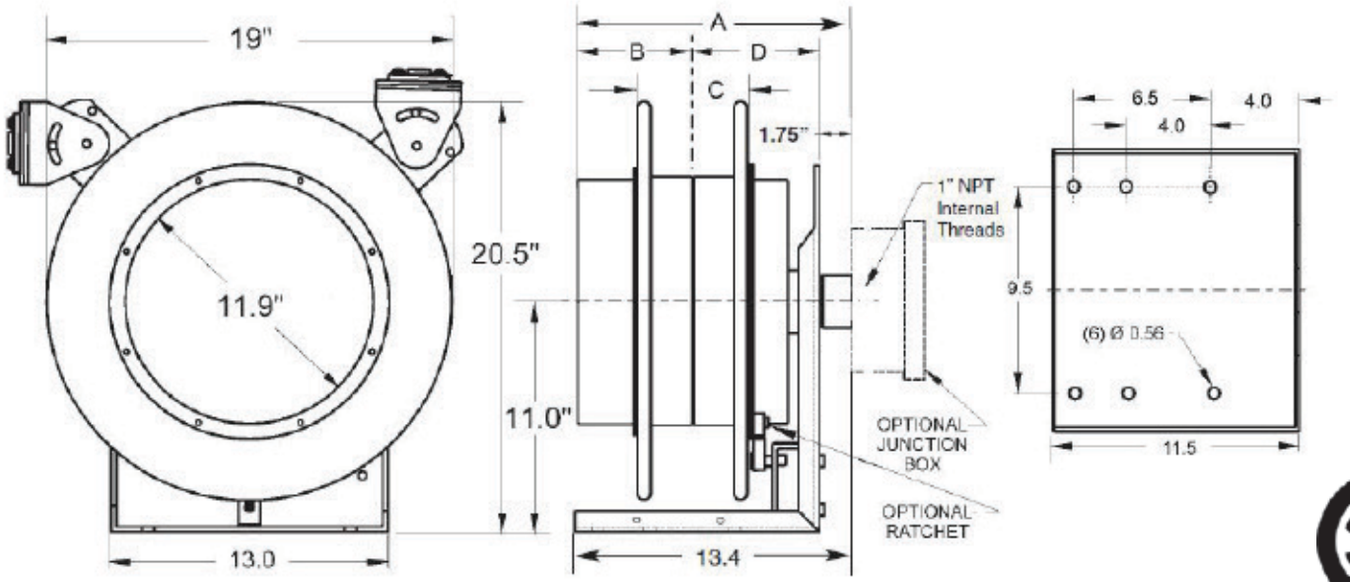

For more information about our other lines of
portable electrical equipment for the toughest workplaces:
www.lindequipment.net | info@lindequipment.net | T: 877.475.LIND